Centralized Drain Pan

PAC-SG64DP-E

Photo

Descriptions

A drain pan for the drain water generated from the outdoor unit.

Applicable Models

- PUHZ-RP60
- PUHZ-RP71
- PUHZ-RP100
- PUHZ-RP125 + 140
- PUHZ-RP200 + 250
- MXZ-8A140VA

Specifications

Drain outlet size		R3/4 screw (20A)
Exterior	Color (Munsell)	Ivory (3.0Y 7.8/1.1)
	Surface treatment	Acrylic resin coating
	Material	Alloy hot-dip zinc-coated carbon steel sheet (t1.6)
Weight		7.8kg
Mounting bolt (locally prepared)		M10 (or W3/8), length: 60mm or less extrusion from drain pan's undersurface

Dimensions

Unit : mm

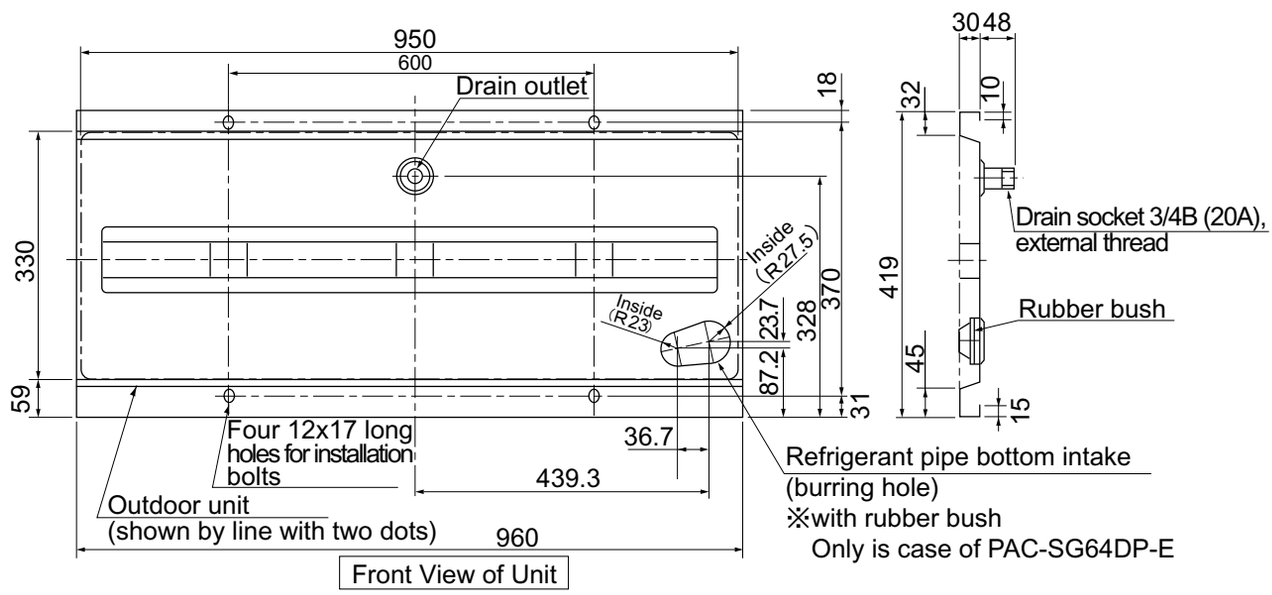

How to Use / How to Install

1 Installation Method

(1) When installing on installation frame

1) The installation frame must have structure and strength that can sufficiently support the outdoor unit and drain pan. Securely install the outdoor unit and drain pan so that they cannot fall or drop as a result of earthquake, strong wind, etc.
2) The drain socket of drain pan is at the center in the longitudinal direction. When constructing the installation frame, be careful that no part of the frame interferes with the socket.
3) The drain pan is tightened with the outdoor unit. Punch approx. ϕ13 holes in the installation frame at pitches to install the outdoor unit.
4) Fix the frame, drain pan and outdoor unit together to join them firmly (at the 4 points). The bolt length must be no more than 60 mm.

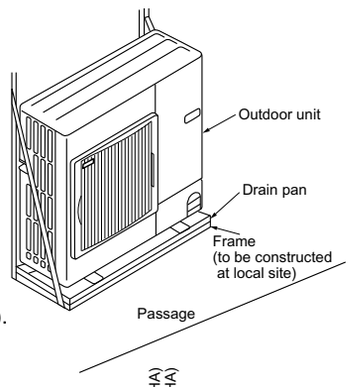

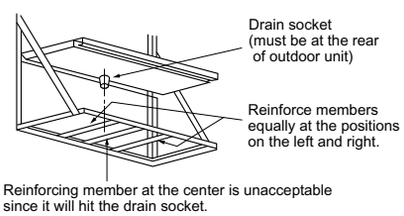

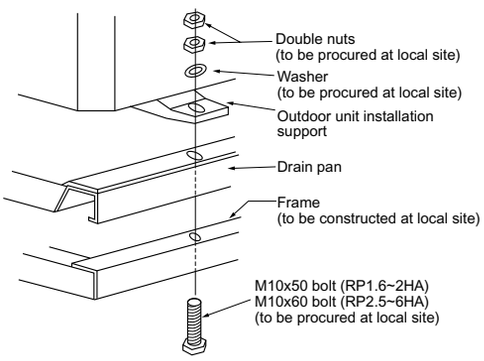

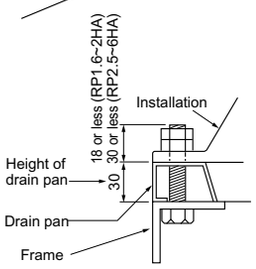

(2) When installing on foundation

- Since concentrated drain disposal is necessary, make the foundation at least 150 mm high measured from the ground as shown in the figure below.
  If it is less than 150 mm, drain piping will not be possible because the drain socket protrudes 48 mm.

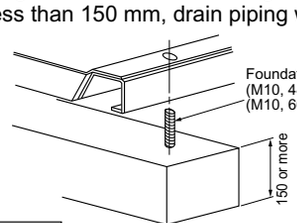

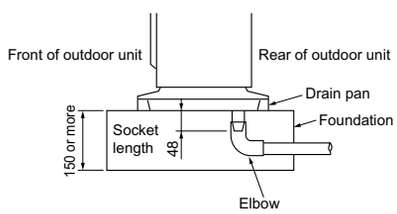

2 Drain Piping

(1) When connecting steel pipe:
Connect 3/4B internally threaded pipe.
(2) When connecting vinyl pipe (soft):
Use a ϕ25 mm internal dia. pipe, and fix the connected section with a hose band, etc.
(3) When connecting PVC pipe (hard):
Use VP-20 and connect with a joint for PVC pipe.
※In all cases, seal the socket threaded section securely with a seal tape, etc., and make sure that water does not leak.

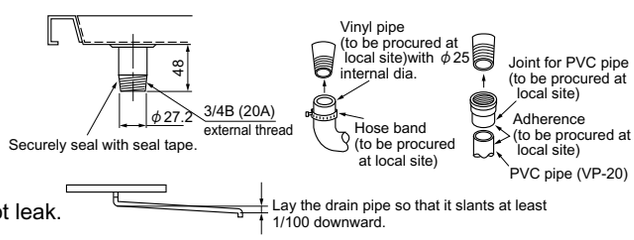

3 Refrigerant Piping

※For PAC-SG64DP-E only

- The refrigerant pipe can be laid in from four directions: front, right, rear and bottom. When laying, be sure to perform the following:

(1) Piping from the bottom:
Cut out the rubber bush to match the thickness of refrigerant pipe insulator. Pass the refrigerant pie through the rubber bush and fit it into the burring hole. Seal it with adhesive that is equivalent to Cemedyne 366 (to be procured at local site) to prevent water leak.
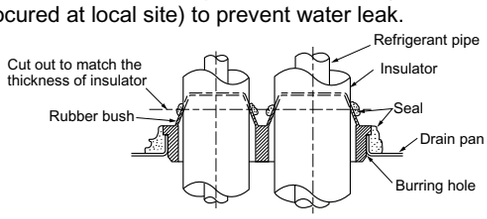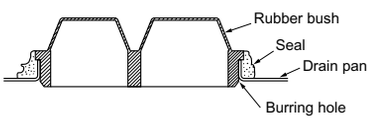
(2) Piping from other directions:
Block the burring hole of the bottom piping section in the drain pan with rubber bush. Seal it with adhesive that is equivalent to Cemedyne 366 (to be procured at local site) to prevent water leak.